SUBMITTAL FOR APPROVAL

Exxel Pacific, Inc.
201602. - The Cora Apartments (19 W Harrison)

DATE: 6/28/2016
SPEC #: 22 0000
REV #: 0

To: **John Whitlow**
VIA Architecture
1809 7th Avenue, Suite 800
Seattle, WA 98101

From: **Jola Bielecki**
Exxel Pacific, Inc.
323 Telegraph Road
Bellingham, WA 98226

We are transmitting the following **Submittal Package 22 0000-05 - Tub & Shower Data**; Rev 0 item(s) for your review in accordance with the contract specification # 22 0000.

Please review and respond to Jola Bielecki by 7/05/2016 in accordance with the contract documents.

Additional Notes:

Submittal Item	Activity Date	Sent To Arch	Copies	Remarks
Tub & Shower Data	6/28/2016	6/28/2016	1	

Sincerely,

Jola Bielecki

EXXEL PACIFIC, INC.
323 Telegraph Road Bellingham, WA 98226

Submittal #	Date Submitted	Reviewed By
22 0000-05	*06/28/16*	*J.B.*

- ☐ No Exceptions Taken
- ☒ Reviewed - Note Markings
- ☐ Revise and Resubmit
- ☐ Rejected

This review is for general conformance with contract documents only and does not relieve the subcontractor/ supplier of responsibility for compliance with applicable drawings, specifications and code.

- ☐ Reviewed by consultant- No VIA comments
- ☒ Reviewed as noted
- ☐ Revise and Resubmit
- ☐ Rejected
- ☐ Submittal not required – returned without review.

This review is only for general compliance with the design concept of the project and general compliance with the information given in the contract documents. Corrections or comments made on the shop drawings during this review do not relieve the contractor from compliance with requirements of the contract documents and applicable laws, codes and regulations. The contractor remains responsible for confirming and correlating all quantities and dimensions, selecting fabrication means and methods of construction, coordinating his or her work with that of all other trades and performing all work in a safe and satisfactory manner.

VIA Architecture Incorporated
John X Whitlow
By: VIA Architecture Date: 6-29-2016

SUBMITTAL TRANSMITTAL

127 10th Street South Suite 200, Kirkland, WA 98033
425-968-8314 Office / (425) 968-8794 Fax

DATE: 22-Jun-16 **JOB NO.:** 2025

TO: Exxel Pacific General Contractors
4220 Aurora Avenue North
Seattle, WA 98103

ATT: Jola Bielecki

RE: The Cora Apartments
19 W. Harrison Street
Seattle, WA 98119

We are delivering by: ☑ Email ☐ Hand Delivering

The following items:

Spec Section	Item	Drwg Ref	Description	Manufacturer	Model No.
Div 22			Tub & Shower Submittals		

REQUESTED RETURN DATE: 13-Jul-16

SUB/SUPPLIER NAME:

REMARKS:

COPY TO: Submittal File
CC:

SIGNED: Richard Donelson

June 22, 2016

Exxel Pacific
4220 Aurora Avenue N.
Seattle, WA 98103
Attn: Jola Bielecki

Re: Cora Apartments – Tub & Shower Submittals

Jola,

Tubs and showers are being submitted separately from other fixtures due to the following:

1. They have long lead times and the tubs and showers are needed at rough-in.
2. Dimensions are needed at the time of forming PT decks so walls can be laid-out and drain sleeves installed in correct locations.

Many of the items below are related to ADA accessibility and/or adaptability. You should be aware that OWP is not an Adaptability Consultant, and we cannot take responsibility for any of the items mentioned below. We only bring them up due to our experience on past projects. ADA and adaptability codes can be interpreted differently depending on the AHJ, architect, consultant, etc.

All other shower and tub trims, including for Type A units, will be submitted via separate submittal. Please let me know if you have any questions or require further information. OWP is always available to discuss solutions to the items below. Thank you.

1. At unit stacks x02, x06, x10, x12, the shower stall control valve and showerhead are located on the party wall, which will conflict with fire-rating, structural shear and acoustical properties of the party walls. Please clarify.

2. Unit plans on sheets A0611 through A0618 show that there will be no drywall over the nailing flange of the tubs and showers. There will need to be something to cover the nailing flange. Please clarify.

3. Unit plans on sheets A0611 through A0618 show dashed boxes in front of showers that represent the clear floor space required by code. Showers are supposed to have 48" clear floor space in front of them. It is our experience that the 48" clear floor space is measured from the face of the fiberglass stall (valve wall). Industry standard showers are 48" outside dimension, so adjustments must be made in the drywall. It is our experience that the approach/clear floor space can be set back from the shower ~2", but this dimension varies depending on the architect or adaptability consultant. Please clarify.

4. It is our experience that different adaptability consultants can have varying opinions of whether or not a curb is allowed at Type B showers, and how high it can be. Please confirm the permanent curbs at showers are acceptable as submitted, including size.

5. Details 3 & 4/A0901 show the bathtub controls at 2'-0" AFF. The bathtub skirt is at 17". The bathtub controls faceplate is 7" diameter, which leaves only 3-1/2" for the tub spout. We suggest that the controls is moved up to 29" AFF to center (for Type A and Type B units). Please confirm this is acceptable.

6. No details are given for shower stall valve controls. Please confirm shower stall valve controls can be mounted at 44" AFF to center.

7. Detail 4/A0901 show showerheads at 80". On most other projects we install the shower head at 84" AFF to centerline of rough-in. This is for both tubs and showers, and Type A and Type B units (Type A will have handshower with hose). Please confirm showerhead heights.

NOTE TO GC: Level/square/plumb of shower and tub openings is critical to ensure proper drainage and longevity of the shower and tubs.

Sincerely,

Richard Donelson
Project Manager / Estimator
richd@owpllc.net
425-591-4296 cell

PROJECT: CORA APARTMENTS
BATH AND SHOWER STALL SUBMITTALS - ONE WAY PLUMBING LLC

TAG	DESCRIPTION:
TS1	BATHTUB/SHOWER COMBO, Aquatic 2603SMTE, 60"W x 33-1/4"D x 79-1/4"H exterior dimensions, 1-piece fiberglass tub/shower stall with backing for future grab bar installation.
TS2	ADA BATHTUB/SHOWER COMBO, Aquatic 2603SMTE, 60"W x 33-1/4"D x 79-1/4"H exterior dimensions, 1-piece fiberglass tub/shower stall with grab bars and folding seat.
SS-1	SHOWER STALL, type B units: Aquatic 1483EN, 48"W x 38-3/4"D x 77-3/4"H exterior dimension, 1-piece fiberglass shower stall with permanent curb threshold. Stall includes grab bar backing in fiberglass walls. Stall selection to be reviewed by architect to meet type B requirements.

TS1 - BATHTUB-SHOWER COMBO - TYPE B

AQUATIC
The bath people

Submittal Sheet

Aquatic products may be specified as Lasco Bathware.

2603SMTE

ANSI Compliant

CUSTOMER: _____

JOB NAME: _____

PO #: _____

QUOTE #: _____ QUANTITY: _____

SHIP TO: _____

_____ ____/____/____
PLUMBING CONTRACTOR APPROVAL DATE

_____ ____/____/____
GENERAL CONTRACTOR APPROVAL DATE

_____ ____/____/____
ENGINEER APPROVAL DATE

_____ ____/____/____
ARCHITECT APPROVAL DATE

IMPORTANT: **ADA compliant showers with NO interior threshold will have water escape onto the bathroom floor. Aquatic highly recommends you take the following precautions:**

1. Install only the minimum number of ADA units without an interior threshold required for each job. If possible install Aquatic's accessible models that have a ½ (15) interior threshold to reduce the amount of water that escapes from the shower.
2. When installing units with NO interior threshold, install a FLOOR DRAIN to control the water that escapes onto the bathroom floor.
3. Depending on your application, you may choose to install Aquatic's vinyl flexible dam or removable threshold, which helps better retain water within the shower. However, these items may not necessarily meet ADA or other code requirements. Always confirm code compliance with your local building authority.

Includes plywood backing, see third page

STANDARD FEATURES

- Code compliant when fully equipped and installed according to guidelines
- Extra wide tub
- Integral toiletry shelves
- LH or RH drain location
- Slip resistant, textured bottom [ASTM F-462]

CONFIGURATION

☐ ~~Fully equipped with seat — ANSI~~
~~Includes four 24" x 1½" diameter grab bars; one 18" x 1½" Diameter vertical grab bar; tri-fold removable seat pressure balancing mixing valve and hand-held shower assembly per ANSI guidelines~~

CUSTOM OPTIONS (not available if ANSI configuration is selected)

Fixture Wall ☐ LH ☐ RH

~~Grab bars:~~
~~Four horizontal 24"and one vertical 18"~~
~~Stainless steel (1½" dia.) ☐ LH ☐ RH~~
~~Powder-coated white (1¼" dia.) ☐ LH ☐ RH~~
~~☐ Tri-fold, plastic removable seat~~
~~☐ Teakwood finish fold up seat~~
~~☐ Hand-held shower assembly with 30" slide bar and 60" hose~~
~~☐ Pressure balancing mixing valve~~

OPTIONAL ACCESSORIES (available for all models)

~~☐ Soap dish~~
~~☐ Curtain rod (Not ANSI compliant)~~
~~☐ Shower curtain~~
~~☐ Brass drain~~

Standard colors
☐ Almond ☐ Biscuit ☐ Bone ☐ White
☐ Other (contact customer service for custom color options)
~~☐ Additional accessories~~

For pricing of units and additional options, reference the Aquatic Price Book.

Grab bars, seat, hand shower will not be provided on this unit.

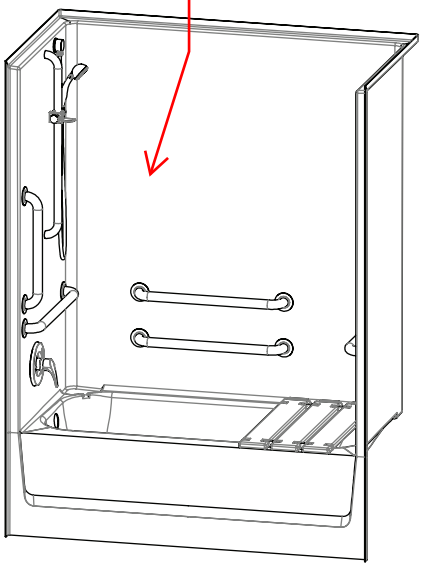

Int. Dim.	56 W x 30 ¼ D x 78 H (1420 x 770 x 1980)
Ext. Dim.	60 W x 33 ¼ D x 79 ¼ H (1525 x 845 x 2015)
Skirt Ht.	17 (430) skirt
Packaged Wt.	209 lbs. (95 kg.) gross
Material	Gelcoat
Warranty	Gelcoat Finished Products — Five Years

inches (mm)

To complete your order, this document must be signed and faxed to the Aquatic Centralized Customer Service Center.
Fax (866) 544-5353 • Phone (800) 945-2726

TS1 - BATHTUB-SHOWER COMBO - TYPE B

AQUATIC

Submittal Sheet

Aquatic products may be specified as Lasco Bathware.

2603SMTE ANSI Compliant

Please indicate changes needed.

Grab bars, seat, hand shower will not be provided on this unit. See memo attached for control elevations and showerhead rough-in locations.

shower head location needs to be centered with no Hand Shower

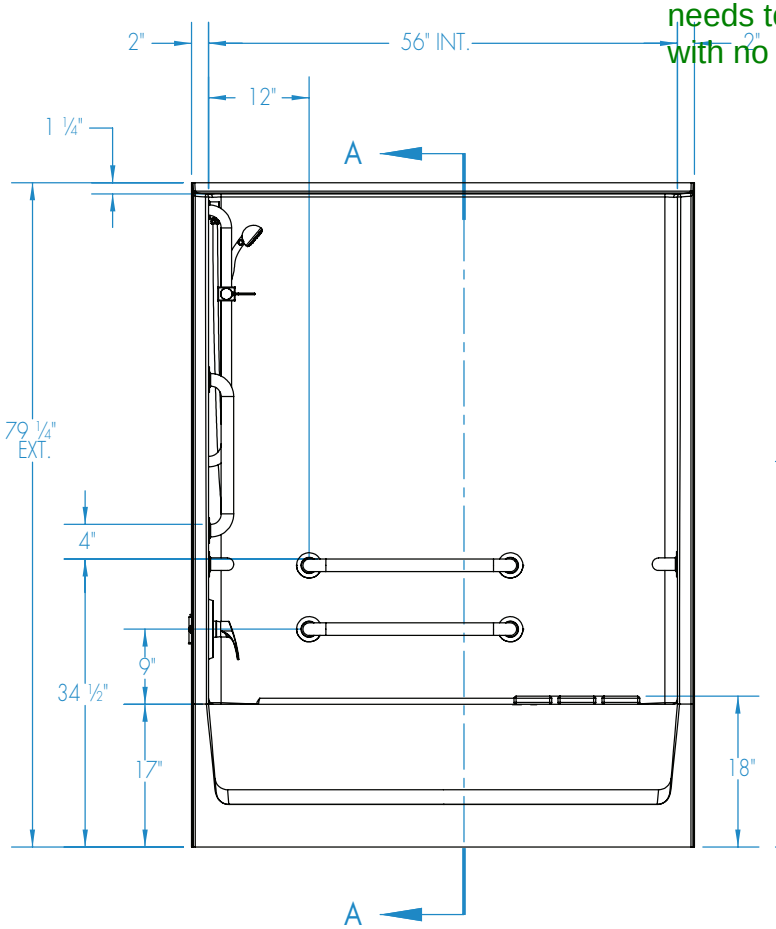

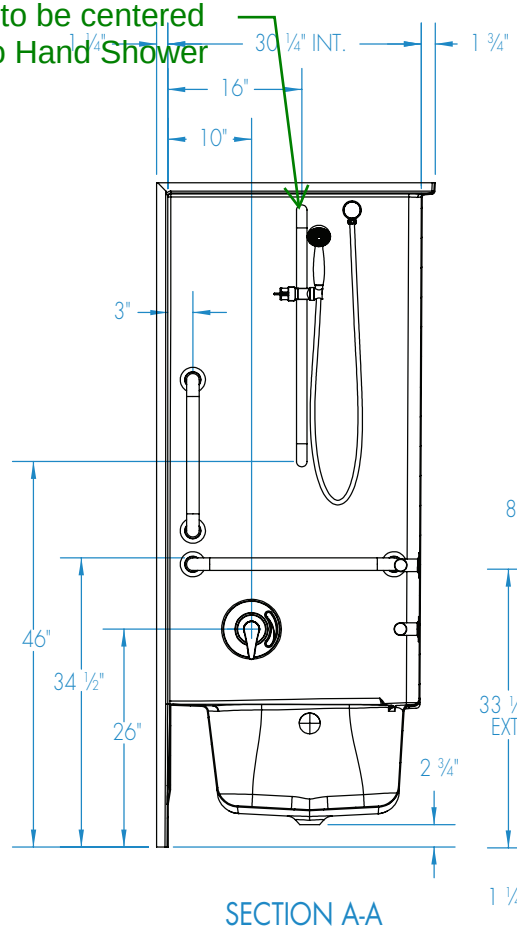

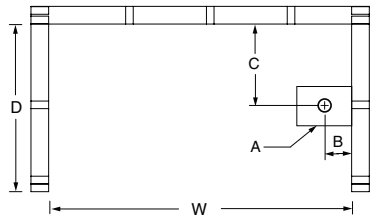

FRAMING DIMENSIONS inches (mm)

Type	D Depth	W Width	A	B	C
Alcove	33 ¼ (845)	60 ⅛ (1525)	6 x 12 (150 x 305)	1 ½ (40)	15 (380)

Installation Options:
1. Install in a recessed pit for rough-in floor installation.
2. Build sub-floor to level finished floor with top of shower threshold.

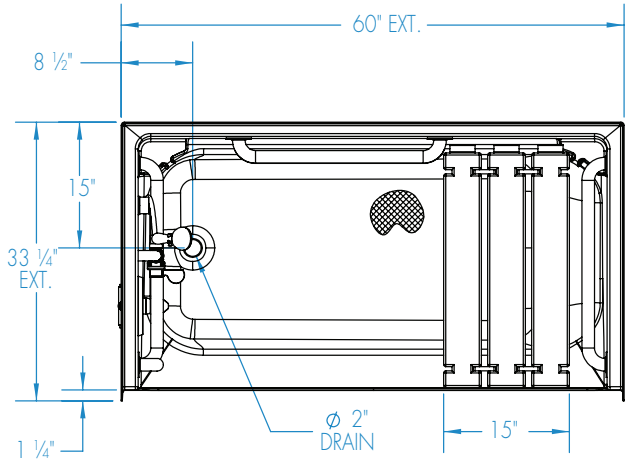

Shell tolerance: +0, – ⅜" All other tolerances: ±1"

FAX TO THE AQUATIC CENTRALIZED CUSTOMER SERVICE CENTER (866) 544-5353

Rev. 01.27.16

TS1 - BATHTUB-SHOWER COMBO - TYPE B

AQUATIC

Submittal Sheet

Aquatic products may be specified as Lasco Bathware.

2603SMTE ANSI Compliant

Please indicate changes needed.

Reinforcement Locations (Standard)

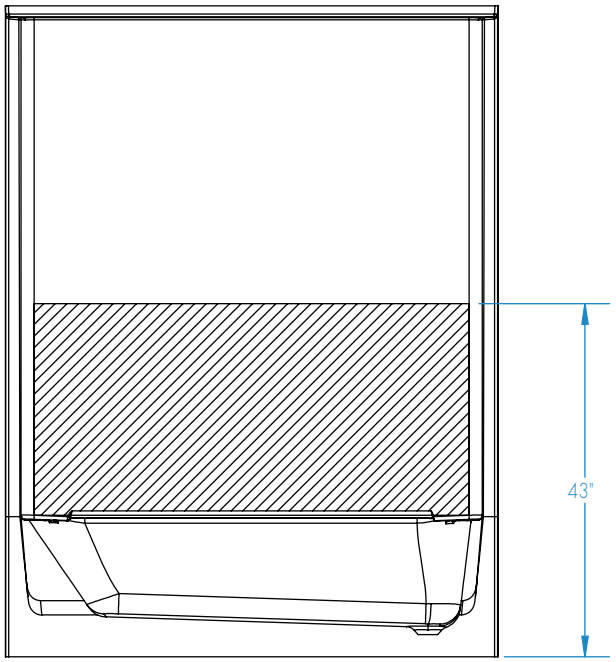

BACK VIEW

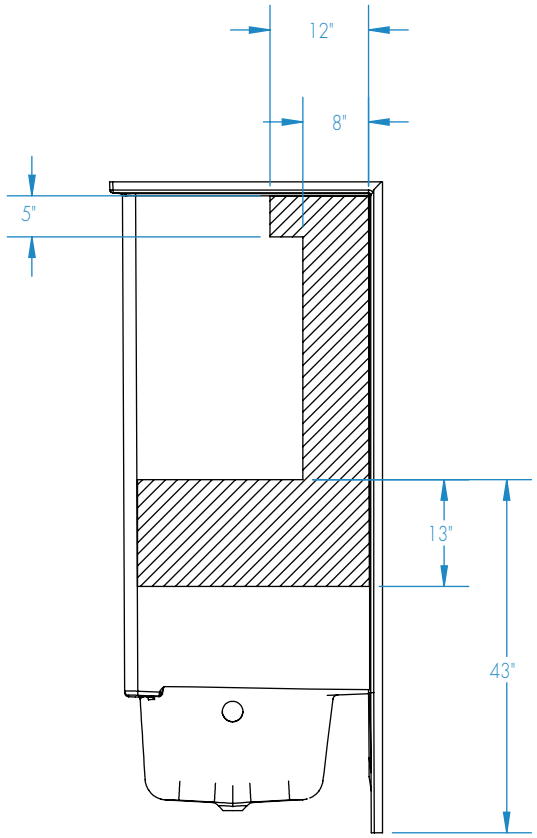

SIDE VIEW (typ.)

= 3/8" OSB REINFORCEMENT

Shell tolerance: +0, – ⅜" All other tolerances: ±1"

FAX TO THE AQUATIC CENTRALIZED CUSTOMER SERVICE CENTER (866) 544-5353

Rev. 01.27.16

TS2 - BATHTUB-SHOWER COMBO - TYPE A

AQUATIC
The bath people

Submittal Sheet

Aquatic products may be specified as Lasco Bathware.

2603SMTE

ADA Compliant

CUSTOMER: _____

JOB NAME: _____

PO #: _____

QUOTE #: _____ QUANTITY: _____

SHIP TO: _____

_____

_____ ____/____/____
PLUMBING CONTRACTOR APPROVAL DATE

_____ ____/____/____
GENERAL CONTRACTOR APPROVAL DATE

_____ ____/____/____
ENGINEER APPROVAL DATE

_____ ____/____/____
ARCHITECT APPROVAL DATE

STANDARD FEATURES

- Code compliant when fully equipped and installed according to guidelines
- Extra wide tub
- Integral toiletry shelves
- LH or RH drain location
- Slip resistant, textured bottom [ASTM F-462]

CONFIGURATION

☐ Fully equipped with seat — ADA
Includes four 24" x 1-1/2" diameter grab bars; tri-fold removable seat; pressure balancing mixing valve and hand-held shower assembly per ADA guidelines

CUSTOM OPTIONS (not available if ADA configuration is selected)

Fixture Wall ☐ LH ☐ RH

Four horizontal 24" grab bars
☐ Stainless steel (1½" dia.) ☐ Powder-coated white (1¼" dia.)

☐ Tri-fold, plastic removable seat
☐ Teakwood finish fold up seat
☐ Hand-held shower assembly with 30" slide bar and 60" hose
☐ Pressure balancing mixing valve

OPTIONAL ACCESSORIES (available for all models)

☐ Soap dish
☐ Curtain rod (Not ADA compliant)
☐ Shower curtain
☐ Brass drain

Standard colors
☐ Almond ☐ Biscuit ☐ Bone ☐ White
☐ Other (contact customer service for custom color options

☐ Additional accessories

For pricing of units and additional options, reference the Aquatic Price Book.

Hand shower will be provided in separate submittal.

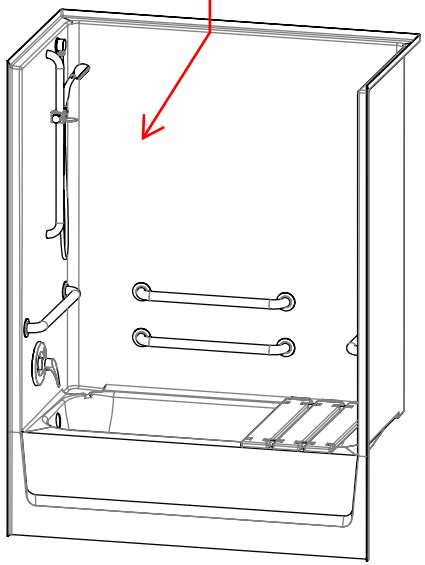

Int. Dim.	56 W x 30 ¼ D x 78 H (1420 x 770 x 1980)
Ext. Dim.	60 W x 33 ¼ D x 79 ¼ H (1525 x 845 x 2015)
Skirt Ht.	17 (430) skirt
Packaged Wt.	209 lbs. (95 kg.) gross
Material	Gelcoat
Warranty	Gelcoat Finished Products — Five Years

inches (mm)

IMPORTANT: ADA compliant showers with NO interior threshold will have water escape onto the bathroom floor. Aquatic highly recommends you take the following precautions:

1. Install only the minimum number of ADA units without an interior threshold required for each job. If possible install Aquatic's accessible models that have a ½ (15) interior threshold to reduce the amount of water that escapes from the shower.
2. When installing units with NO interior threshold, install a FLOOR DRAIN to control the water that escapes onto the bathroom floor.
3. Depending on your application, you may choose to install Aquatic's vinyl flexible dam or removable threshold, which helps better retain water within the shower. However, these items may not necessarily meet ADA or other code requirements. Always confirm code compliance with your local building authority.

To complete your order, this document must be signed and faxed to the Aquatic Centralized Customer Service Center.
Fax (866) 544-5353 • Phone (800) 945-2726

TS2 - BATHTUB-SHOWER COMBO - TYPE A

AQUATIC

Submittal Sheet

Aquatic products may be specified as Lasco Bathware.

2603SMTE ADA/UFAS/TAS Compliant

Please indicate changes needed.

Hand shower will be provided in separate submittal. See memo attached for control elevations and showerhead rough-in locations.

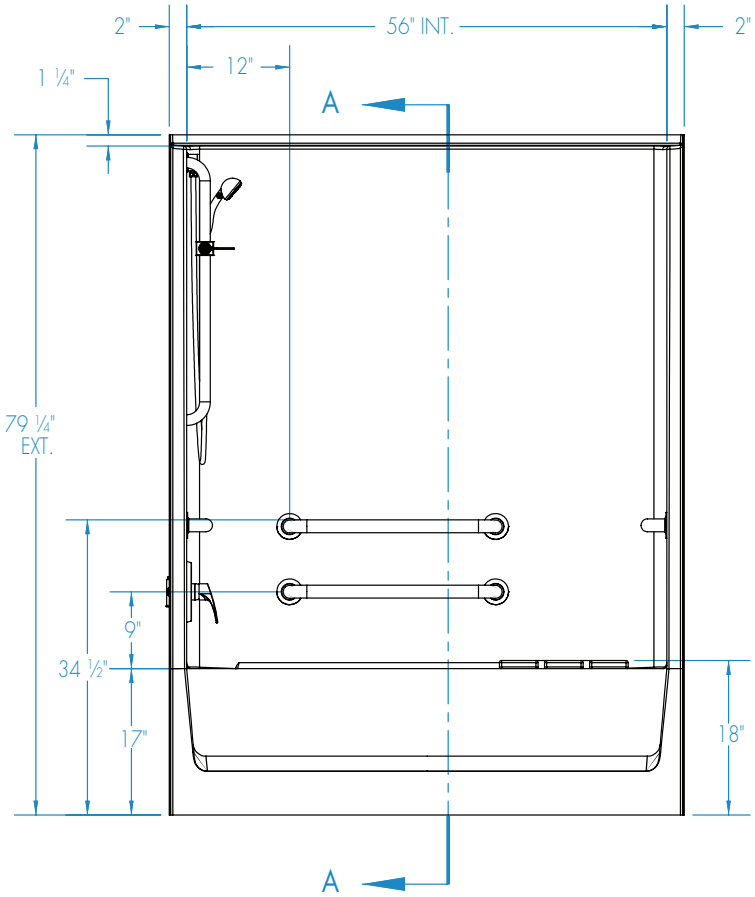

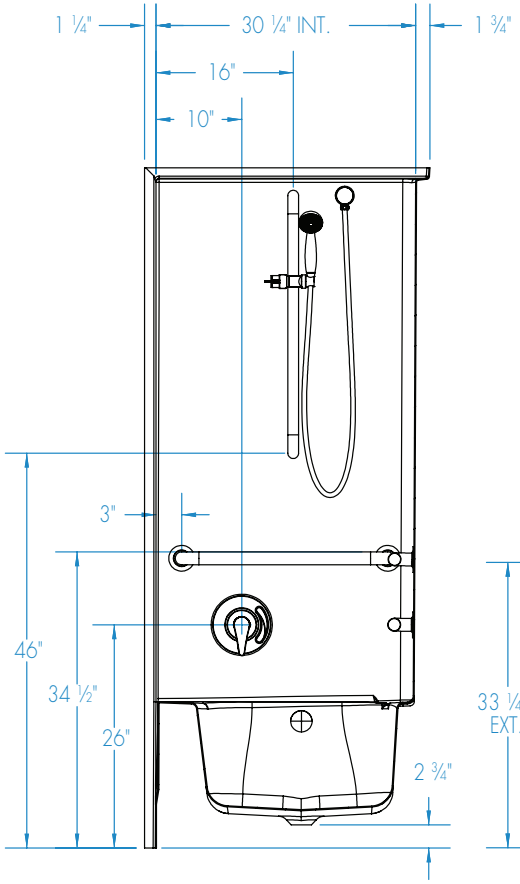

SECTION A-A

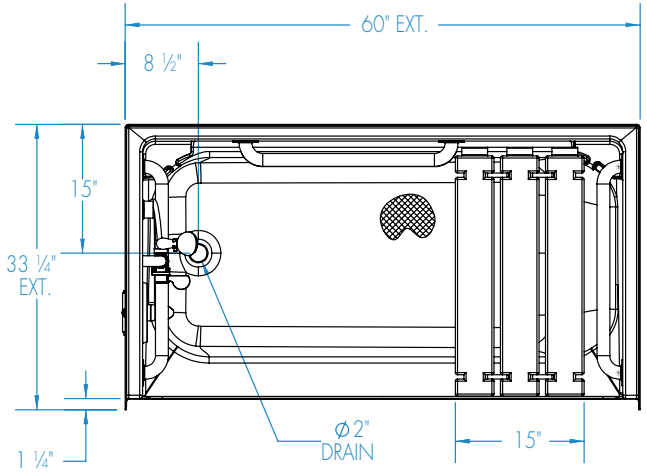

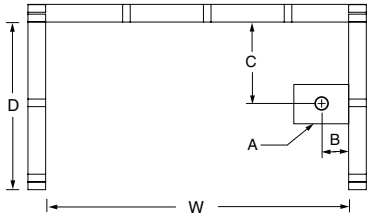

FRAMING DIMENSIONS inches (mm)

Type	D Depth	W Width	A	B	C
Alcove	33 ¼ (845)	60 ⅛ (1525)	6 x 12 (150 x 305)	1 ½ (40)	15 (380)

Installation Options:
1. Install in a recessed pit for rough-in floor installation.
2. Build sub-floor to level finished floor with top of shower threshold.

Shell tolerance: +0, – ⅜" All other tolerances: ±1"

FAX TO THE AQUATIC CENTRALIZED CUSTOMER SERVICE CENTER (866) 544-5353

Rev. 01.27.16

SS1 - SHOWER STALL - TYPE B

1483EN – ACCESSIBLE SHOWERS

inches

Interior: 45 ½ x 36 ¼ x 75 ⅝
Exterior: 48 x 38 ¾ x 77 ¾

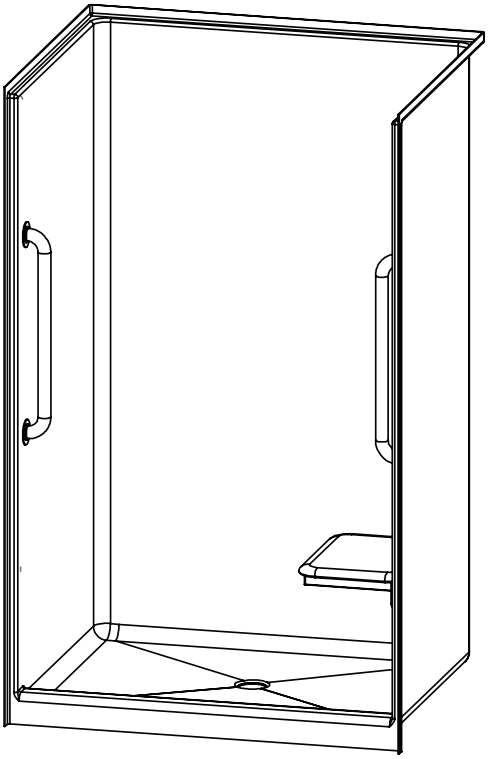

NOTE: This shower stall will come with grab bar reinforcement.

FEATURES

- East zone only
- Gelcoat surface
- 3 ¾" (95 mm) skirt
- 2 ⅜" (60 mm) interior threshold
- Smooth wall
- 5-year limited warranty

OPTIONS

- Grab bars
- Fold-up seat
- Hand-held shower assembly with slide bar
- Pressure balancing mixing valve
- Soap dish
- Curtain rod and/ or shower curtain

CODE COMPLIANCE

- IAPMO Z124-2011

**Code compliant when fully equipped and installed according to guidelines.

AQUATIC ADVANTAGE

- 6 manufacturing facilities
- Private fleet
- Centralized customer service
- Field support

COLOR & TRIM OPTIONS

Stock
Almond
Biscuit
Bone
White

**Additional custom colors available. (Contact Customer Service)

AQUATIC
The bath people

Aquatic products may be specified as Lasco Bathware.

SS1 - SHOWER STALL - TYPE B

AQUATIC
The bath people

TECHNICAL SPECIFICATIONS

Aquatic products may be specified as Lasco Bathware.

1483EN

Interior: 45 ½ x 36 ¼ x 75 ⅝
Exterior: 48 x 38 ¾ x 77 ¾
inches

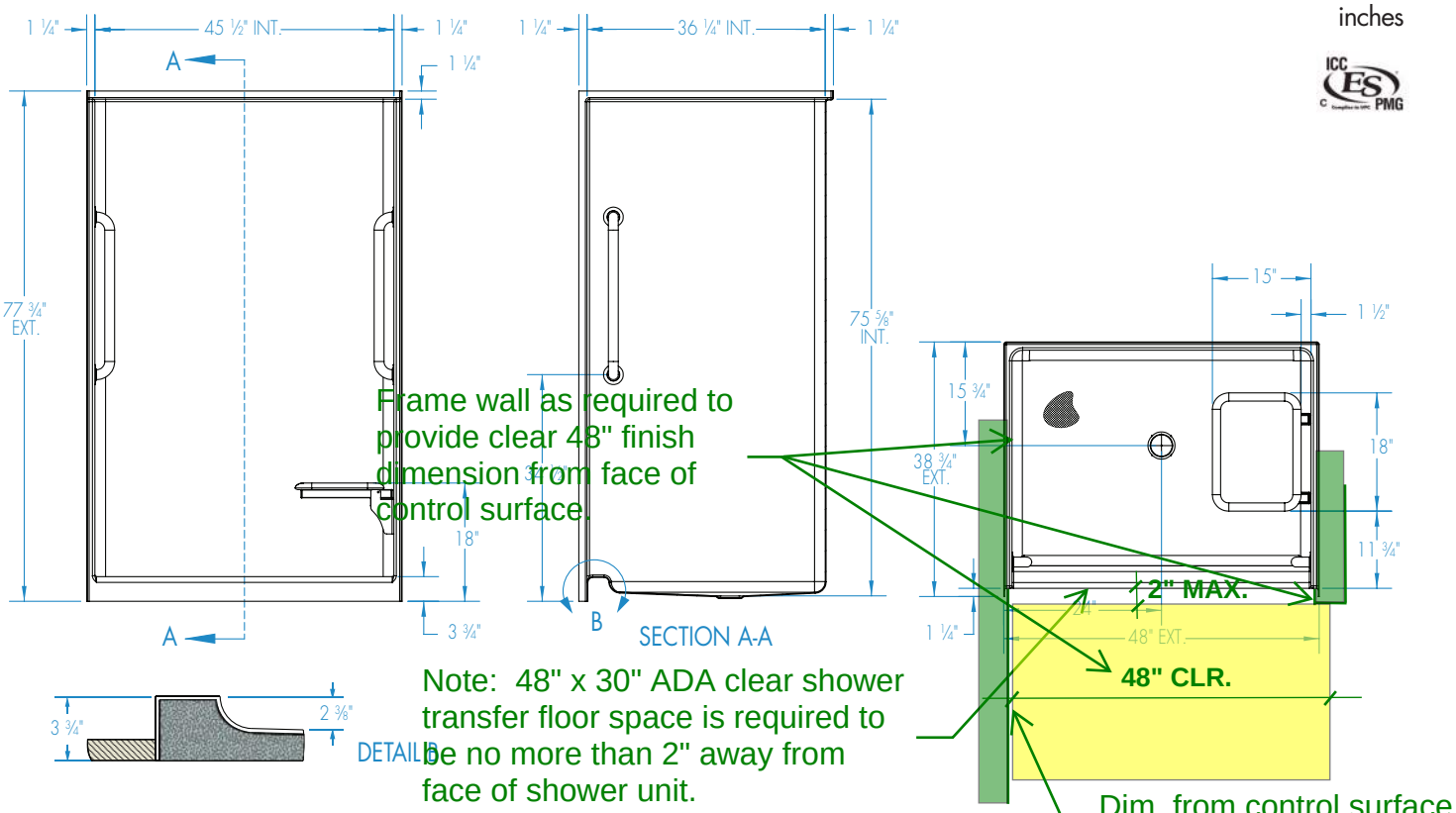

FEATURES lbs (kg)

Dimensional Tolerance ± ⅜". Dimensions needed for site preparation should be measured from the unit. Aquatic assumes no responsibility for preparatory work.

Type and Model #	Material	Wall Finish	Pieces	Drain	Dam/Skirt Height	Net Wt.	Pkg. Wt.
Shower #1483EN	Gelcoat	Smooth	1	Center	3 ¾ (95mm) skirt	118	128

DIMENSIONS

Specifications	inches
Width: Exterior / Interior	48 / 45 ½
Depth: Exterior / Interior	38 ¾ / 36 ¼
Height: Exterior / Interior	77 ¾ / 75 ⅝
Enclosure Opening:	45 ½
Skirt Height:	3 ¾
Drain Rough-In (from Back Wall)	15 ¾
Drain Rough-In (from Side Wall)	24

FRAMING DIMENSIONS inches
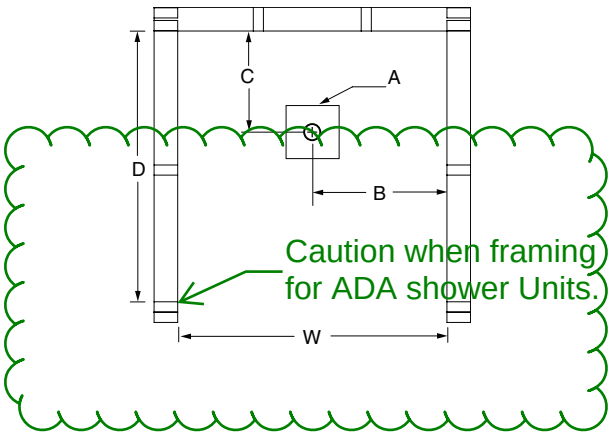
Type	D Depth	W Width	H Height	A	B	C
Alcove	38 ¾	48 ⅛	–	Box Out	24	15 ¾